PES™-106

Eddy Current Proximity Sensor
User's Manual

P/N 9431-09M7A-100

Safety Information

The following manual contains information and warnings. They must be followed in order to keep the instrument in a working condition and ensure safe operation.

Safety Symbols

	Warning - Danger - Identifies conditions or practices that could cause physical harm or death.
	Caution - Identifies conditions or practices that could result in a permanent loss of data or damage the measuring chain and/or other equipment to which it is connected.
	Important Information - Identifies important information, hints, and tips that must be read and applied.

Safety Precautions

Warning - Danger Caution

- **To use the described product correctly and safely, read and follow all safety instructions or warnings that appear throughout this manual.**
- **This product in intended to be used by qualified operators and maintenance personnel who recognize shock hazards and are familiar with the safety precautions required to avoid possible injury. Read and follow all installation, operation, and maintenance information before using this product.**
- **Install and use this product only as specified in this manual or the protection provided by this product might be impaired.**
- **When in doubt that safety protection has been impaired, make this product inoperative and secure it against any unintended operation.**
- **Do not use this product in wet environments.**

The VibroSystM logo, ZOOM®, and PES™ are registered trademarks or trademarks of VibroSystM Inc.

This manual is provided solely for guidance. VibrosystM Inc. takes no responsibility or liability for any damage caused by accidents, improper installation or misuse. Liability is limited to the repair and/or replacement of defective products.

VibroSystM Inc. 2727 Jacques-Cartier E. Blvd, Longueuil, QC, Canada J4N 1L7 | Phone: 450 646-2157 | U.S. Toll-free Line: 800 663-8379

Email: techsupp@vibrosystm.com | www.vibrosystm.com

© 2015 VibroSystM Inc. All rights reserved

TABLE OF CONTENTS

1. PES-106 SENSOR OVERVIEW 5

1.1 Description 5
1.2 Main Unit Interventions 5

2. SENSOR OPERATION 6

2.1 Connecting the PES-106 Sensor 6
2.2 Assessing the Actual Sensitivity 7
2.2.1 Measuring Current Output (Iout) and the Corresponding Distance 8
2.2.2 Taking a Measurement with the Sensor Installed 9
2.2.3 Calculating the Sensitivity 9
2.2.4 Adjustment Through the ZOOM Configuration Software 10

3. SENSOR INSTALLATION OVERVIEW 11

3.1 Sensor Positioning 11
3.2 Typical Installation 11

APPENDIX: TEMPLATE FOR RECORDING DISTANCE VALUES VS I_{out}

1. PES-106 SENSOR OVERVIEW

1.1 Description

The PES-106 proximity sensor is designed for non-contact measurements of relative vibration, displacement, and axial positioning. It acquires data by measuring the distance between its sensing face and a metallic target surface. Furthermore, this sensor is equipped with built-in conditioning circuitry allowing it to be directly connected to processing instrumentation through an M12 connector and signal cable.

The PES-106 covers a 0 to 6 mm *[0 to 236 mils]* measuring range.

PES-106 Eddy Current Proximity Sensor

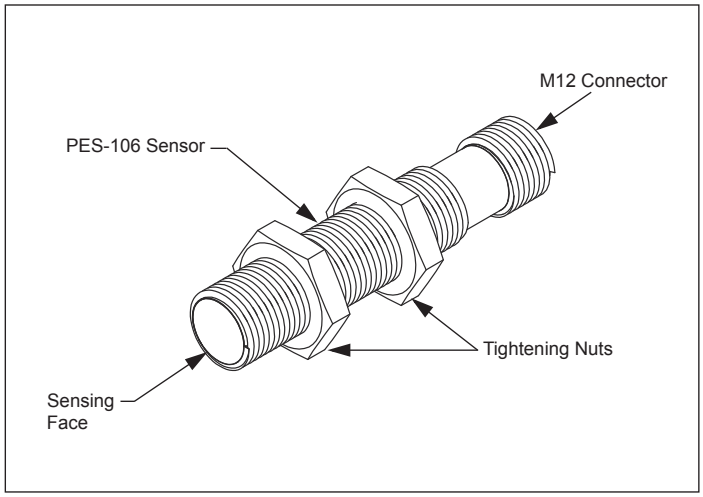

1.2 Main Unit Interventions

- Sensor holders must bolted or welded at appropriate locations.
- Signal cables must be routed and protected from the sensor all the way to the acquisition unit.

Caution

- Instructions for sensor installation and connection must be thoroughly followed to ensure a safe and proper operation.
- In order to complete the commissioning, VibroSystM must be contacted when Section 2.2 (Assessing the actual sensitivity) is reached.

2. SENSOR OPERATION

2.1 Connecting the PES-106 Sensor

The PES-106 sensor must first be connected to a 24VDC power supply and a receiving instrument with a signal cable and M12 connector. It is important to confirm the sensor's functionality before proceeding with a permanent installation.

The signal cable's shield must be grounded. It is important to ground the shield on one end only to avoid creating a ground loop. If the M12 connector at the end of the cable is insulated from the shield, the shield must then be grounded on the acquisition unit side. However, if the M12 connector at the end of the cable is connected to the shield, attaching the cable to the already grounded PES-106 sensor will automatically ground the shield. In this case, the shield must not be grounded on the acquisition unit side.

PES-106 Pinout

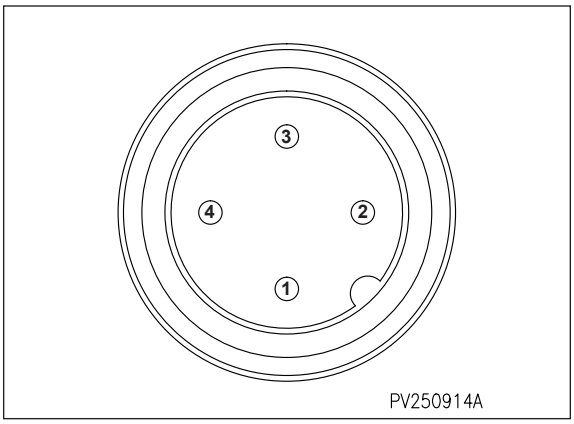

The signal cable provided by VibroSystM may be replaced by any cable having similar characteristics. The table below shows the color codes, designations and specifications for VibroSystM's signal cable.

M12 Connector Pin #	Corresponding Color Code	Designation	Specifications
1	Brown	Power Supply	+24 VDC
2	White	Current Output	4-20 mA (proportional to sensor's full range)
3	Blue	Common	0 V
4	Black	Voltage Output	0-10 V (proportional to sensor's full range)

2.2 Assessing the Actual Sensitivity

The PES-106 proximity sensor is calibrated to produce a linearized output based on an FE360 steel target. Because the sensitivity of eddy current sensors is affected by the target's material, the actual sensitivity must be determined.

Important Information

- Failure to correctly assess and compensate the sensitivity will result in incorrect measurement results as presented in the illustration below.

PES-106 Calculated Distance vs Sensor Current Output

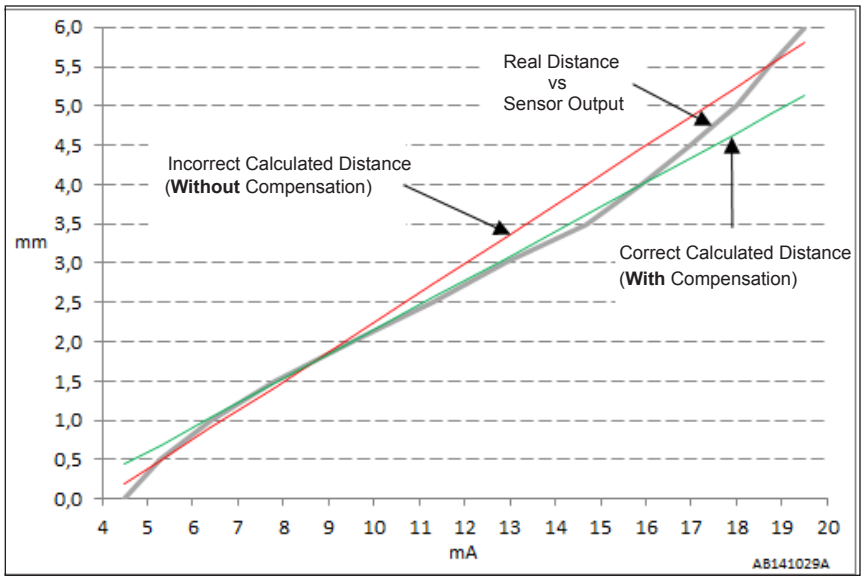

Important Information

- Section 2.2.1 must be completed **BEFORE** installing the sensor. Sections 2.2.2, 2.2.3, and 2.2.4 must be completed **AFTER** installing the sensor.
- In the examples below, calculations are in metric format. All distances may also be measured in inches with the resulting values used in the same formulas.

2.2.1 Measuring Current Output (I_{out}) and the Corresponding Distance

To assess the sensor's actual sensitivity, physical distance and current measurements must first be taken using a target made of the **same material** as the real target. Minimum dimensions for the target are: 50mm x 50mm x 2mm *[2" x 2" x 1/16"].*

Proceed as follows:

Fill the table with measurements (distance vs current), equally distributed on the full current scale. Add **non- metallic** spacers between the sensor's tip and the target until I_{out} max. is approximately reached. Note down the current value and the distance (total spacer thickness) in the table. Gradually remove spacers to approximately reach the next I_{out} level and again, write down the current value and distance. Repeat until the table is filled. The last I_{out} value is measured without spacers (0mm), with the sensor's tip placed directly against the target.

Recorded Distance Values vs I_{out} for PES-106

Ideal level of I_{out} (mA)	20	16	12	8	4
Measured I_{out} (mA)					
Measured distance (mm)					**0**

Example of Recorded Distance Values vs I_{out} for PES-106

I_{op} *approx.*

$I_{out\,B}$ $I_{out\,A}$

Measured I_{out} (mA)	**19.5**	**15.9**	**12.9**	**9.5**	**4.5**
Measured distance (mm)	**6**	**4**	**3**	**2**	**0**

d_B d_A

2.2.2 Taking a Measurement with the Sensor Installed

With the sensor now installed, take a measurement and note the real operating current (I_{op}).

Important Information
• For best results, the sensor should be installed at a distance corresponding to the middle of the measuring range when the target is stationary (unit stopped).

Example with PES-106: I_{op}= 12.9 mA

2.2.3 Calculating the Sensitivity

Select two points in the table on either side of the value closest to I_{op}. These two points (A & B) will be used to define the linear equation. The selected points should be at an equal distance from I_{op}. Ideally, point A should be at I_{op} - 4 mA and point B at I_{op} + 4mA.

For example, if I_{op} = 12.9 mA:

Point A: I_{op} - 4 mA = 8.9 mA (closest correspondence in the table: $I_{out\,A}$ = 9.5 mA, d_A = 2 mm)

Point B: I_{op} + 4 mA= 16.9 mA (closest correspondence in the table: $I_{out\,B}$ = 15.9 mA, d_B = 4 mm)

a) Using selected points A and B, calculate «**m**» (the sensitivity or gain).

	Example	
$m = \frac{d_B - d_A}{I_{outB} - I_{outA}}$	$m = \frac{4 - 2}{15.9 - 9.5} = \frac{2}{6.4}$	= **0.313**

b) Using the formula below, calculate «b» (the y-intercept) of the linear equation, using calculated «**m**», measured current and I_{out} and measured distance «d» corresponding to point A or point B.

	Example with values closest to I_{op}	
$b = d - (m \times I_{out})$	$b = 4 - (0.313 \times 15.9)$	= - **0.977 mm**

c) The equation to calculate the compensated distance corresponding to the sensor current output is the following:

$d_C = (m \times I_{out}) + b$

Where:

d_C is the calculated distance (in mm)

d) Verify the «**m**» and «**b**» calculated values by applying the following formula on the measured value between the **A** and **B** coordinates:

for I_{out} to equal 12.9 mA, verify that d_C = 3 mm (± 10% of range).

d_C = (0.313 x 12.9) - 0.977 = **3.06 mm**

2.2.4 Adjustment Through the ZOOM Configuration Software

Proceed with the final adjustment through the ZOOM Configuration software. Select **Sensor Configuration**, and in the **Range** tab of the dialog window, enter the **Maximum** and **Minimum** values of the **Raw output range**.

Formulas for Adjusting the Raw Output Range

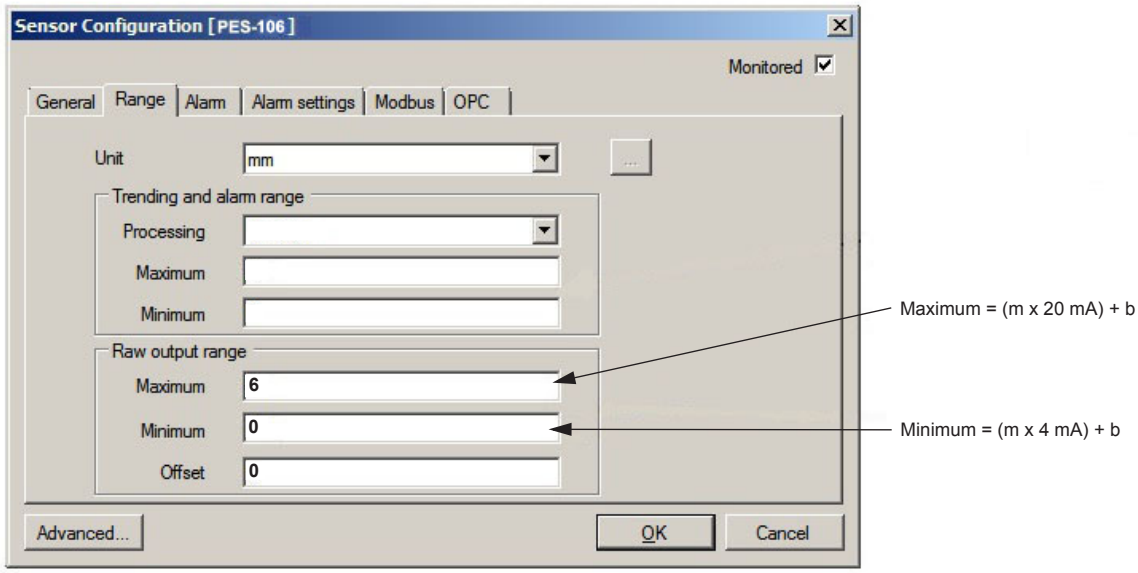

Note: In the **Trending and alarm range** section, the **Maximum** and **Minimum** values must be within the limits of the **Raw output range**.

Example with Calculated Values

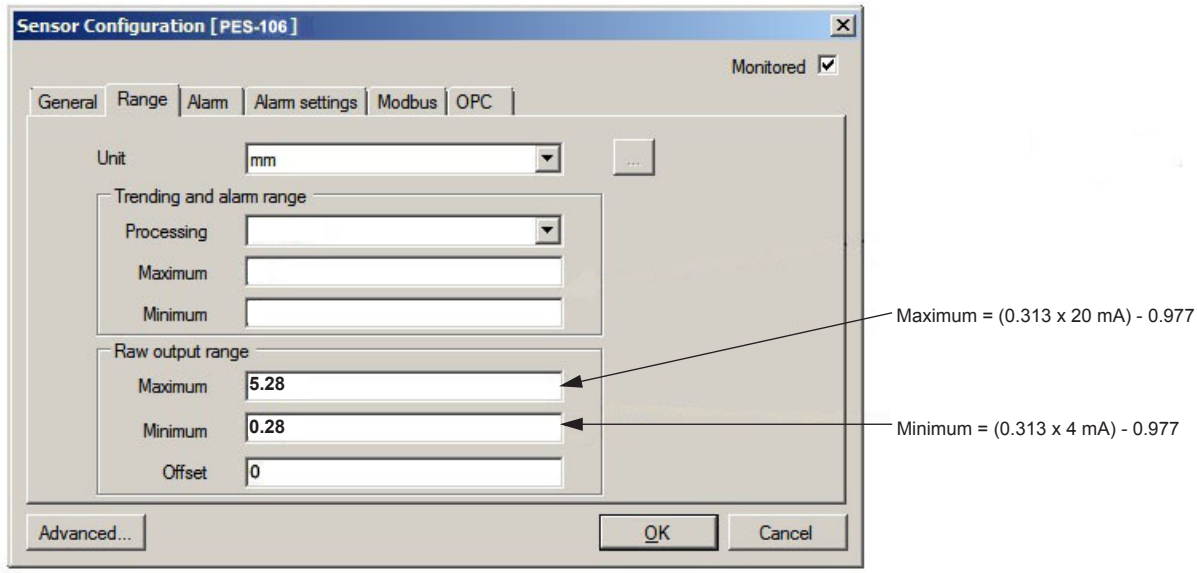

3. SENSOR INSTALLATION OVERVIEW

3.1 Sensor Positioning

Caution

- The PES-106 sensor must be properly connected with the signal cable well protected to avoid any sort of mechanical damage.

Before determining where to install the sensor, consider the following:

- The sensor's surface must face the target.
- The maximum extension cable length must be considered. From the sensor to the acquisition unit, the maximum distance is 300 m *[984 ft]* for the current output, and 100 m *[328 ft]* for the voltage output.

Important Information

- VibroSystM recommends relying on the services of a trained technician for supervising the installation of these proximity sensors and finalizing the ZOOM software configuration.

3.2 Typical Installation

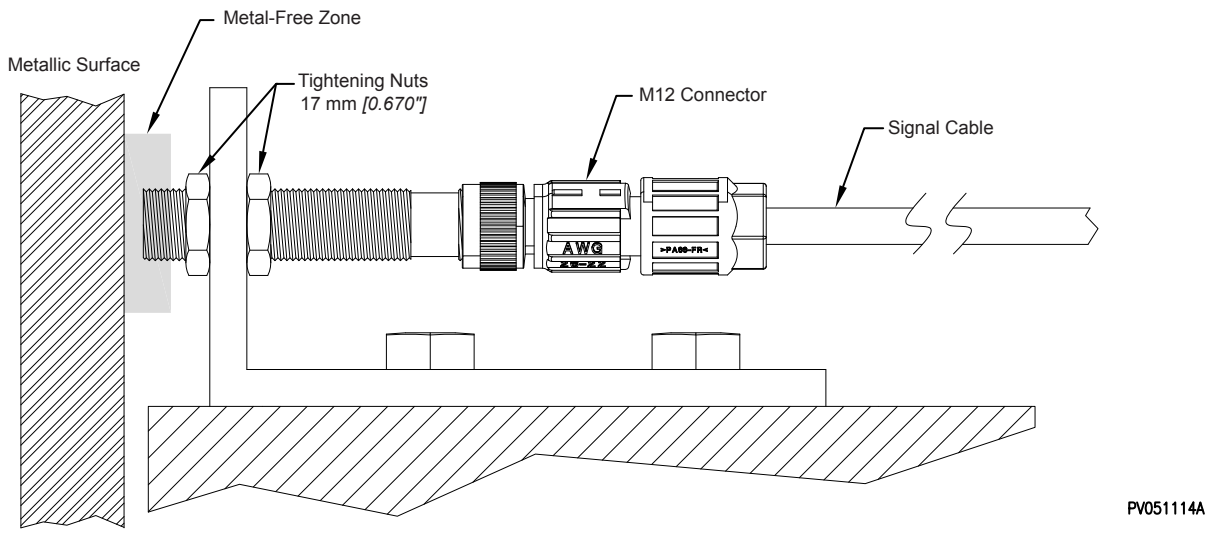

APPENDIX: TEMPLATE FOR RECORDING DISTANCE VALUES VS I_{out}

Unit no.: _____ Sensor S/N: _____ Position: _____

Measured I_{out} (mA)					
Measured distance (mm)					**0**

Unit no.: _____ Sensor S/N: _____ Position: _____

Measured I_{out} (mA)					
Measured distance (mm)					**0**

Unit no.: _____ Sensor S/N: _____ Position: _____

Measured I_{out} (mA)					
Measured distance (mm)					**0**

Unit no.: _____ Sensor S/N: _____ Position: _____

Measured I_{out} (mA)					
Measured distance (mm)					**0**

Unit no.: _____ Sensor S/N: _____ Position: _____

Measured I_{out} (mA)					
Measured distance (mm)					**0**

Unit no.: _____ Sensor S/N: _____ Position: _____

Measured I_{out} (mA)					
Measured distance (mm)					**0**